Eaton Advantage Series Clutches

Solo Advantage & Easy Pedal Advantage

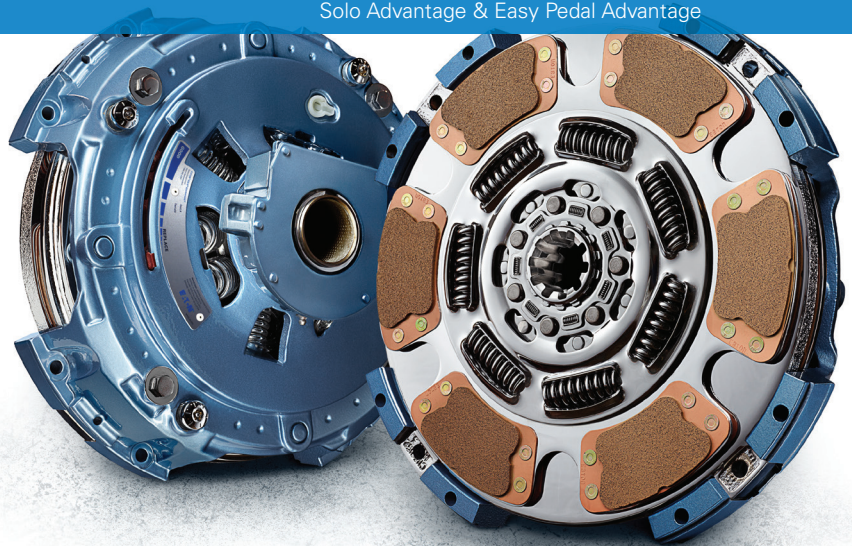

More Protection. Less Maintenance.

Only Advantage Series clutches offer the performance, reliability and protection to stay productive and profitable.

Key features include:

- 50,000-mile standard lubrication internal for linehaul applications
- Patent-pending release bearing provides increased lubrication and improved strength to extend the life of the clutch.
- Improved steel-backed bushings resist wear for increased service life.
- Premium damper from Eaton reduces the drivetrain torsionals and meet the long life expectations of vehicle OEMs.
- Proprietary facing material to provide longer disc facing life.

In addition, an entirely new bearing housing design improves reliability while decreasing maintenance.

Enhanced Features of the New Bearing Housing Design:

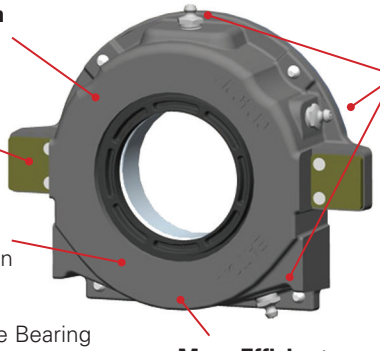

Solo Advantage Benefits:

- Solo technology keeps the clutch in constant adjustment by maintaining bearing release position.
- Features an easy-to-see wear indicator.
- A full-round contamination baffle protects against debris.
- Stainless steel cam spring delivers increased durability and long life.
- Exclusive Vibration Control Technology Plus dampers significantly reduce severe vibration and quiet neutral gear idle rattle.
- Eliminates 13 manual adjustments for every truck, on average.

Easy Pedal Advantage Benefits:

- Kwik-Adjust and proven Powerthread™ technology simplifies clutch adjustment.
- Adjusting requires approximately half the movement of standard adjusting rings.
- Interchangeable with all current twin plate models.
- Positive separator pin assures equal plate separation, smoother engagement and cooler operation.

EATON

Powering Business Worldwide

Vibration Control

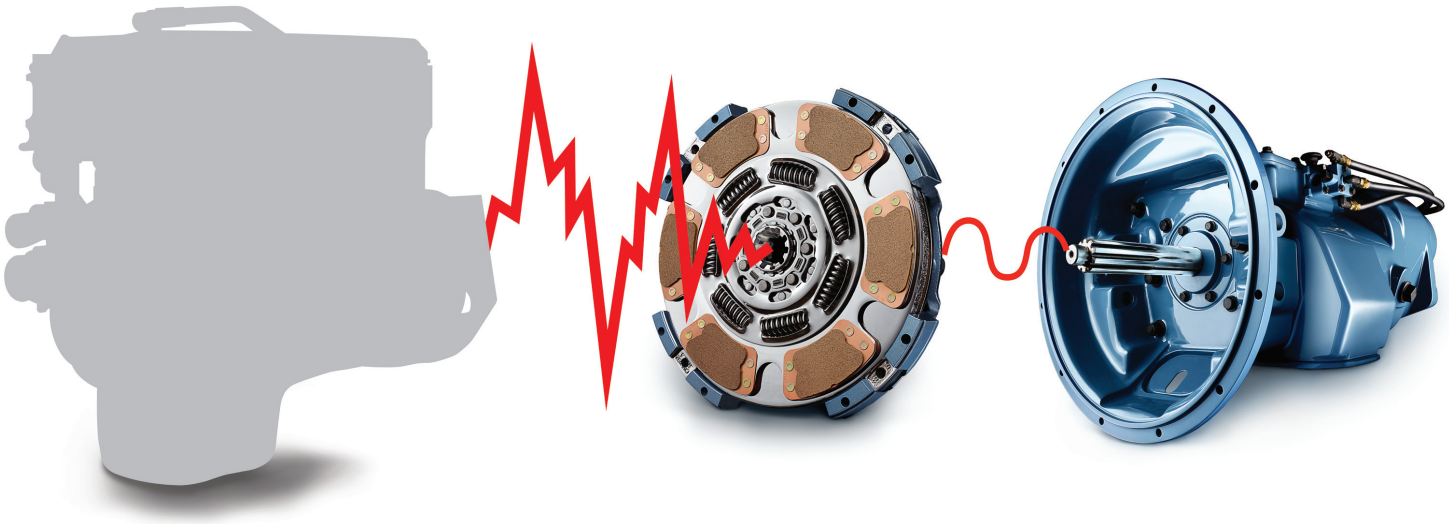

Vibrations destroy drivetrains. Ninety percent of a clutch's work cycle is spent dampening these vibrations from the engine to the drivetrain. Eaton engineers collaborate with engine manufacturers and vehicle OEMs to design and test clutches to provide the best protection to high-value drivetrain components.

Eaton uses the highest quality spring wire paired with heattreated components, so the complete damper package is more durable and lasts longer. Proprietary disc facing compounds offer low facing wear, allowing for longer life, as well as the smoothest engagement and highest coefficient of friction in the industry. Finally, Eaton's torque and thermal management systems improve performance, reduce linkage noise and wear, and help prolong the life of the drivetrain.

In addition to these standard features, Eaton also offers two additional technologies to save wear and tear on drivetrains.

VCT Technology

Eaton's VCT technology has long been the industry standard for reducing vibration, with pre-damper technology to reduce idle rattle noise.

OVC Technology

Eaton's Optimized Vibration Control clutches are designed specifically for the distinct torsional vibrations of single axle highway applications to protect the high-value components within the drivetrain. OVC technology softens the spring rate on the lower torque seven-spring clutches and are uniquely designed for today's trend in downspeeding engines for fuel economy.

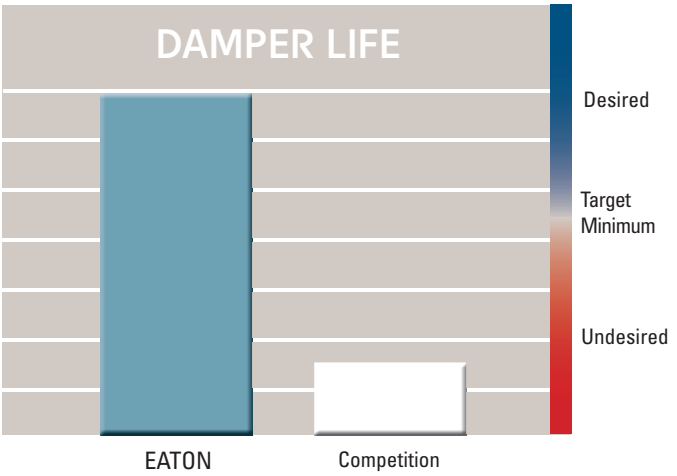

The premium damper from Eaton reduces the drivetrain torsionals and meets the long life expectations of vehicle OEMs.*

*Based on Eaton testing.

Common Failures due to Inferior Clutches

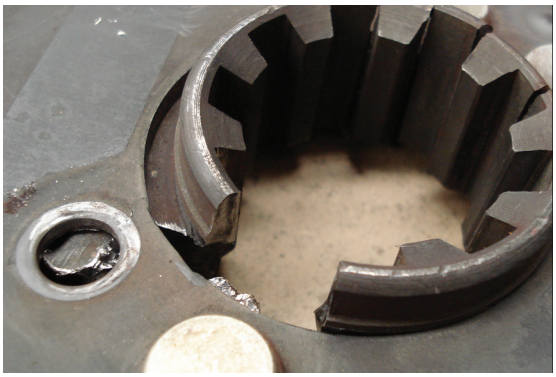

Broken hub

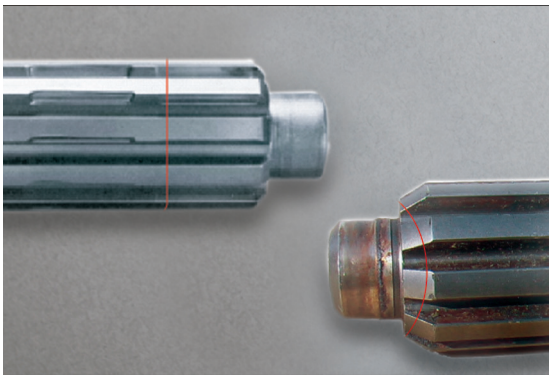

Shaft spline wear/Pilot stub wear

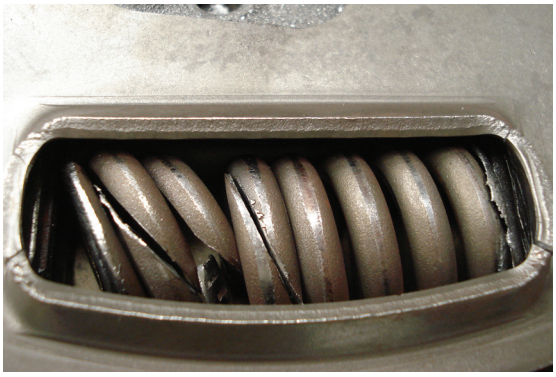

Broken spring

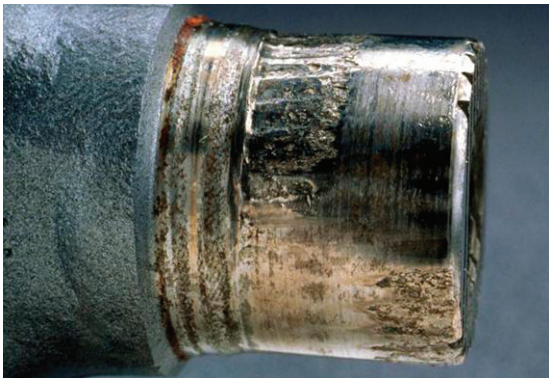

U-joint damage/wear

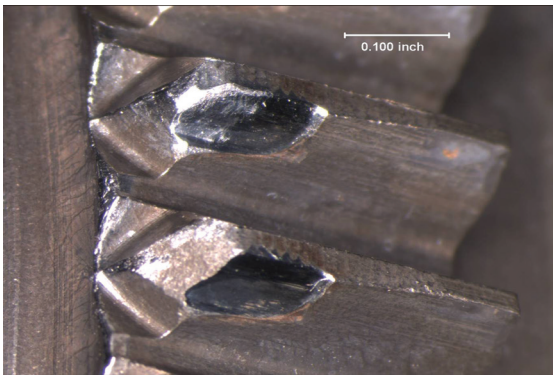

Transmission gear damage

Broken U-joint

Solo Advantage and Easy Pedal Advantage Part Numbers

1. Solo self-adjusting clutches are recommended for trucks with hydraulic linkages to reduce the risk of driveline damage.

2. Choose size of your cast two-plate heavy-duty clutch. **Note**: All spline diameters are 2".

3. Determine fly wheel bore opening and select number of springs.

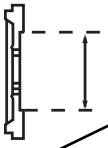

4. Choose clutch torque. Rating in chart must be equal to or exceed torque rating.

								Original Equipment Specifications			
15.5 Inch	**Spline Diameter and No. of Splines**	**Flywheel Bore Opening**	**Number of Springs**	**Clutch Torque lb-ft** *(must exceed engine torque)*	**Disc Type**	**Facing**	**Weight Each***	**Solo Advantage®**	**Solo Advantage with Pre-Damper**	**Easy Pedal Advantage®**	**Easy Pedal Advantage with Pre-Damper**
	2" - 10	7"	8	1070	DOF-CO-FT	Organic	150				
				1250	DOF-CO-FT	Organic	150				
				1400	DCF-CO-FT	4	150				
					DOF-CO-FT	Organic	150				
		8.5"	10	1650	DCF-CO-FT	4	150				
		10"	9 (Mack and Volvo 11L & 13L)	1650	DCF-CO	4	150	209701-51		208925-51	
				1760	DCF-CO	4	150	209701-61		208925-61	
				1650	DCF-CO	6	150	209701-91		208925-91	
				1760	DCF-CO	6	150	209701-92		208925-92	
			7 (Mercedes)	1700	DCF-FT	4	150	209701-14	209701-34	208925-14	208925-34
			7	1450	DCF	4	150	209701-80		208925-80	
				1650	DCF-OVC	4	150	209701-87		208925-87	
				1650	DCF-OVC	6	150	209701-88		208925-88	
				1700	DCF	4	150	209701-82	209701-34	208925-82	208925-34
						6	150	209701-85	209701-29	208925-85	208925-29
				1750	DCF-VCTplus	4	150	209701-24	209701-34	208925-24	208925-34
				1760	DCF-VCTplus	6	150		209701-29	208925-19	208925-29
				1860	DCF-VCTplus	6	150	209701-20	209701-30	208925-20	208925-30
				1860	DCF-CO	6	150				
				2050	DCF-CO	6	150				
				2050	DCF-VCTplus	6	150	209701-25	209701-35	208925-25	208925-35
	2" - 14	10"	7	2250	DCF-VCTplus	6	150	209708-32	209708-42	208937-32	208937-42
14 Inch	**Spline Diameter and No. of Splines**	**Flywheel Bore Opening**	**Number of Springs**	**Clutch Torque** *(must exceed engine torque)*	**Disc Type**	**Facing**	**Weight Each***	**Solo**		**Easy Pedal**	
	2" - 10	7"	None	1000	ROF	Organic	110				
			8	1000	DCF-CO-FT	3	110			108034-61B	
					DOF-CO-FT	Organic	110	N/A			
				1150	DOF-CO-FT	Organic	110			108034-82B	
				1400	DCF-CO-FT-SD	4	110			108050-59B	

*Estimated Shipping Weight

5. Narrow clutch choice based on options. All part numbers in row meet your specs.

Disc Type: D CF CO

- **D = Dampened**
- **CF = Ceramic Facing**
- **OF = Organic Facing**
- **CO = Coaxial**
- **FT = Free Travel**
- **SD = Super Duty**
- **VCT PLUS® = Vibration Control Technology**
- **OVC = Optimized Vibration Control**

6. **Advantage Series:**

- Original Equipment Specification
- 2-year / unlimited mile warranty (Solo and Easy Pedal Advantage – Aftermarket)
- 3-year / 350,000 mile warranty (Solo Advantage – Production Linehaul)
- 2-year / 200,000 mile warranty (Easy Pedal Advantage – Production Linehaul)
- 50,000-mile lube interval

BACKED BY
Roadranger
SUPPORT

For spec'ing or service assistance, call 1-800-826-HELP (4357) or visit www.eaton.com/roadranger. In Mexico, call 001-800-826-4357.

Roadranger: Eaton and trusted partners providing the best products and services in the industry, ensuring more time on the road.

Eaton
Vehicle Group
P.O. Box 4013
Kalamazoo, MI 49003 USA
800-826-HELP (4357)
www.eaton.com/roadranger

© 2013 Eaton
All Rights Reserved. Printed in USA.
CLSL1510 0713

Note: Features and specifications listed in this document are subject to change without notice and represent the maximum capabilities of the software and products with all options installed. Although every attempt has been made to ensure the accuracy of information contained within, Eaton makes no representation about the completeness, correctness or accuracy and assumes no responsibility for any errors or omissions. Features and functionality may vary depending on selected options.

EATON
Powering Business Worldwide